KR 20-3

	KR 20-3
Max. reach	1,611 mm
Rated payload	20 kg
Rated suppl. load, arm	10 kg
Maximum total load	30 kg
Pose repeatability	±0.05 mm
Number of axes	6
Mounting position	Floor, ceiling
Robot footprint	580 mm x 580 mm
Weight (excluding controller), approx.	254 kg

Axis data/ Range of motion		Speed with rated payload 20 kg
Axis 1 (A1)	+/-185°	156°/s
Axis 2 (A2)	+35°/-155°	156°/s
Axis 3 (A3)	+154°/-130°	156°/s
Axis 4 (A4)	+/-350°	330°/s
Axis 5 (A5)	+/-130°	332°/s
Axis 6 (A6)	+/-350°	616°/s

Operating conditions

Ambient temperature	+5 °C to +55 °C

Protection rating

Protection rating, robot	IP 65
Protection rating, in-line wrist	IP 65

	Steuerung
	KR C4

	Bedienhandgerät
	KUKA smartPAD

Work envelope [1]	**Dimensions A**	**Dimensions B**	**Dimensions C**
KR 20-3	2,026 mm	2,412 mm	1,611 mm

Dimensions D	**Dimensions E**	**Dimensions F**	**Dimensions G**	**Volume**
1,081 mm	530 mm	1,027 mm	670 mm	**14.5 m3**

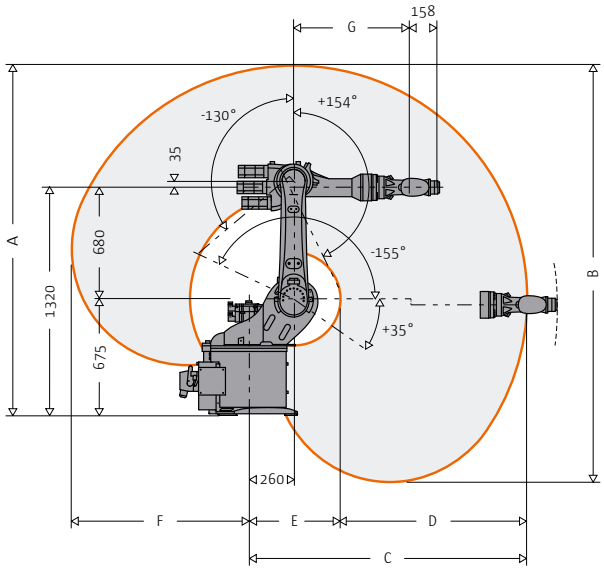

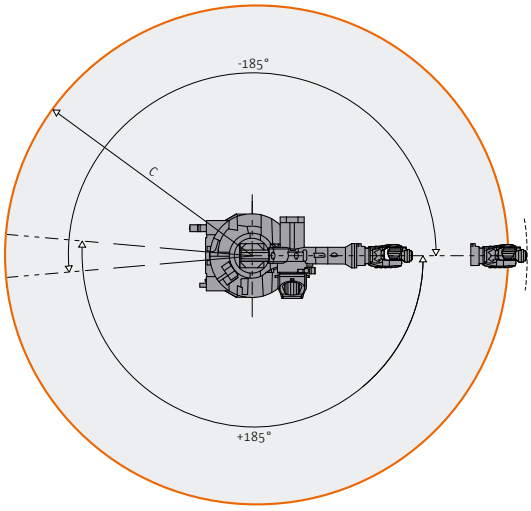

KUKA Roboter GmbH
Zugspitzstraße 140, 86165 Augsburg, Germany, Phone: +49 821 797-4000, www.kuka-robotics.com

Details provided about the properties and usability of the products are purely for information purposes and do not constitute a guarantee of these characteristics. The extent of goods delivered and services performed is determined by the subject matter of the specific contract. No liability accepted for errors or omissions.

[1] Relative to intersection of axes 4/5.